-GAUGES-

VOLTMETER
(+) 280 (-) = 239

OIL TEMP
G=239 I=242
S=282 ENGINE
S= 35 FRONT DRIVER
S= 36 REAR DRIVER
S= 59 MAIN TRANSMISSION
S=241 AUX TRANSMISSION

BRAKESAVER OILTEMP
S=112 G=239 I=242

FUEL LEVEL
S= 14 G=239 I=242

VARASHIELD
S=345 G=239 I=242

WATER TEMPERATURE
S=380 G=239 I=242

AMMETER
337,338

SHT 1 SK18250

-SWITCHES-

KYSOR OIL PRESSURE
23 =C 231=NO 106=NC

KYSOR WATER TEMP
231=C 285=NO 232=NC

LOW WATER LEVEL
A98

OIL PRESSURE SWITCH
106

INTERAXLE DIFF
145,239

FIFTH WHEEL
192,242

LOW AIR
305,239

STOP LIGHT
3 281,279

SHT 2 SK18250

SWITCHES (CONTINUED)

SWITCH CONNECTORS

HEADLIGHTS
28,298,8,24

CLEARANCE LIGHTS
28,25,8,5

FOG/DRIVING (AUX LIGHTS)
28,27,8,7

AD LAMP
249 & 280

LOAD LAMP
254 & 280

FUEL LEVEL
2,14,1

SPOT LIGHT
280,132

HEATED MIRROR
303,302

ENGINE FAN
226,220

SHT 3 SK18250

SWITCHES (CONTINUED)

SHUTDOWN OVERRIDE
23,232

ETHER
29,83

JAKE BRAKE (2 SWITCH)

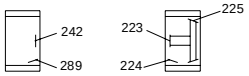

ELECTRICAL WASHER
242,404

START BUTTON
29,286

IGNITION SWITCH
12=BATT
23,286=IGN
252=ACC

JAKE BRAKE (1 SWITCH TYPE)

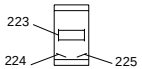

SPLICE 242 & 289

SHT 4 SK18250

SWITCHES (CONTINUED)

VARASHIELD

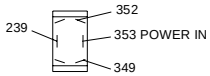

KYSOR SHUTDOWN W/AUTOMATIC OVERRIDE
W/LOW WATER LEVEL

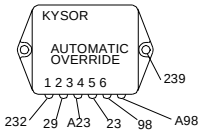

W/O LOW WATER LEVEL

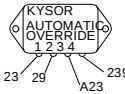

SHT 5 SK18250

JUMPERS

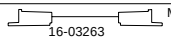
16-03263 MALE BLADES IN SHELL, BOTH ENDS

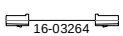
16-03264 FEMALE IN SHELL, BOTH ENDS

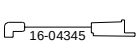
16-04345 90 #10 MOLDED WITH MALE BLADE IN SHELL

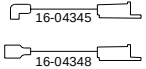
16-04348 1/4" FEMALE MOLD WITH MALE BLADE IN SHELL

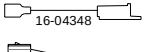
16-04349 2 FEMALE SHELLS WITH MALE BLADE IN SHELL

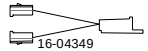
16-04352 BULB SOCKET WITH 2 MALE BLADES IN SHELL

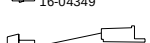
16-05057-0000 0250 0400 3/16" FEMALE MOLD WITH MALE BLADE IN SHELL

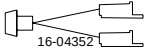
16-04354 #10 RING TERM WITH MALE BLADE IN SHELL

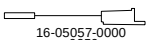
16-04562-0000 0600 0100 0900 0250 1600 BUTT SPLICE TO MALE BLADE IN SHELL

SHT 6 SK18250

WIRE CODES

1) CIRCUIT NUMBERS REMAIN THE SAME AS 359,362
2) CIRCUIT NUMBERS PRINTED ON INSULATION EVERY 4" OR LESS
3) COLORS

CKT	STRIPE OR INSULATION COLOR
239	BLACK
242	RED
253	BLUE
280	YELLOW
ALL OTHERS	WHITE INSULATION

4) COLORS FOR ABOVE CIRCUITS MAY BE STRIPES ON WHITE INSULATION OR COLORED INSULATION WITH CONTRASTING CIRCUIT MARKING

SHT 7 SK18250

JAKE BRAKE

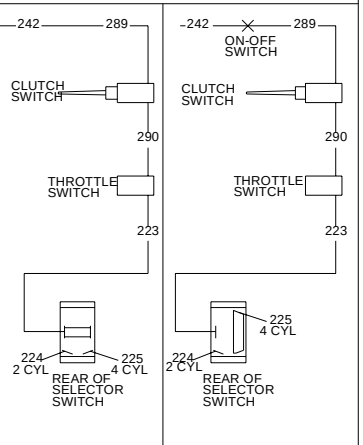

SHT 8 SK18250

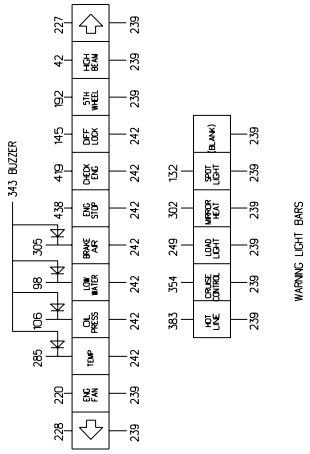

SHT 9 SK18250

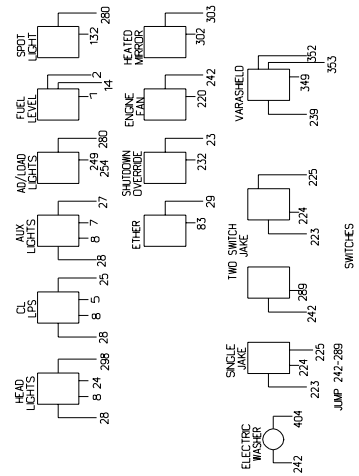

SHT 10 SK18250

Peterbilt
A DIVISION OF PACCAR

PD803374.FRM

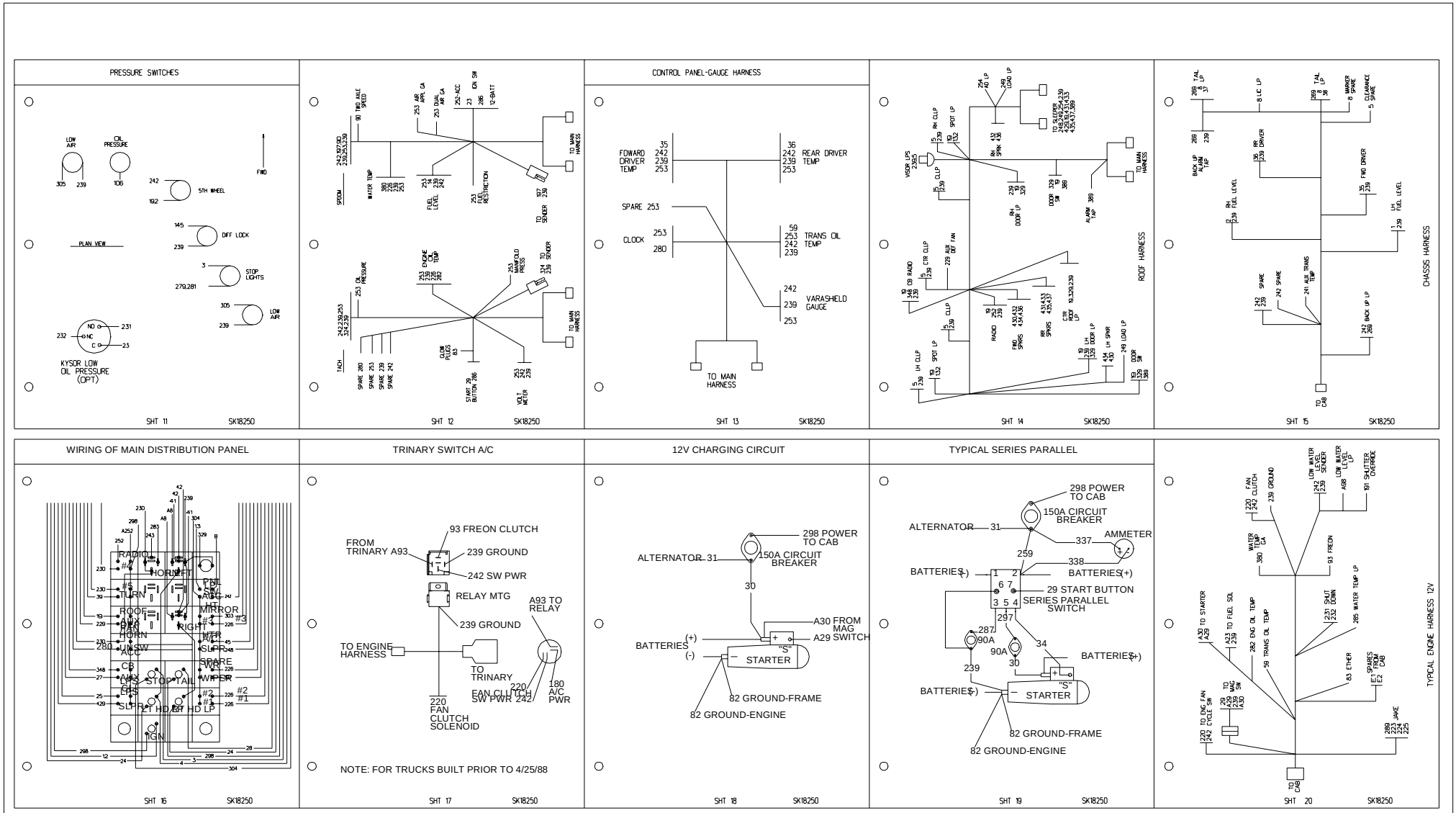

Peterbilt
A DIVISION OF PACCAR

PD803374.FRM

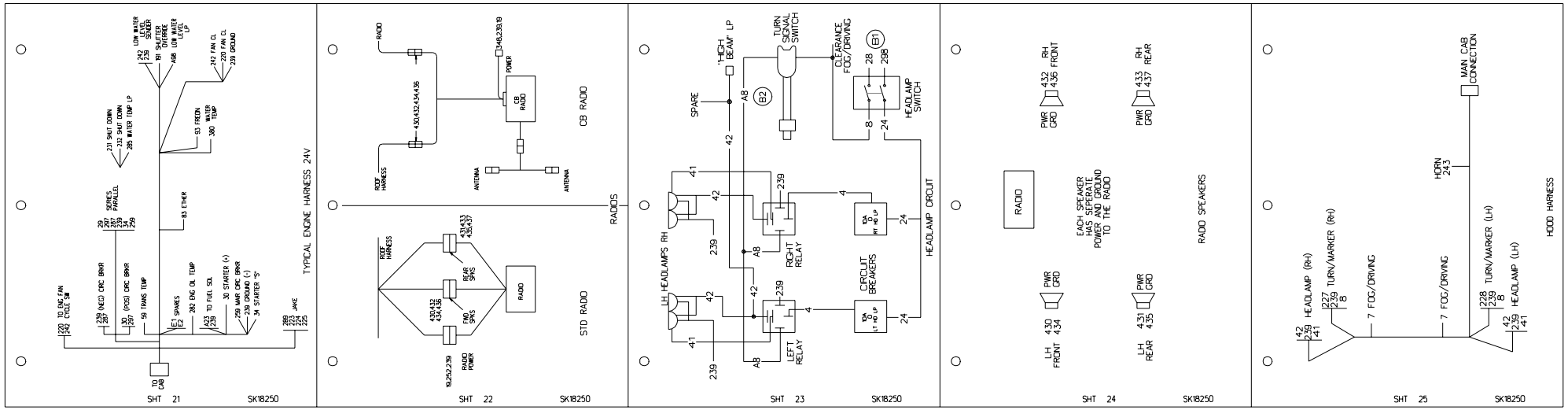

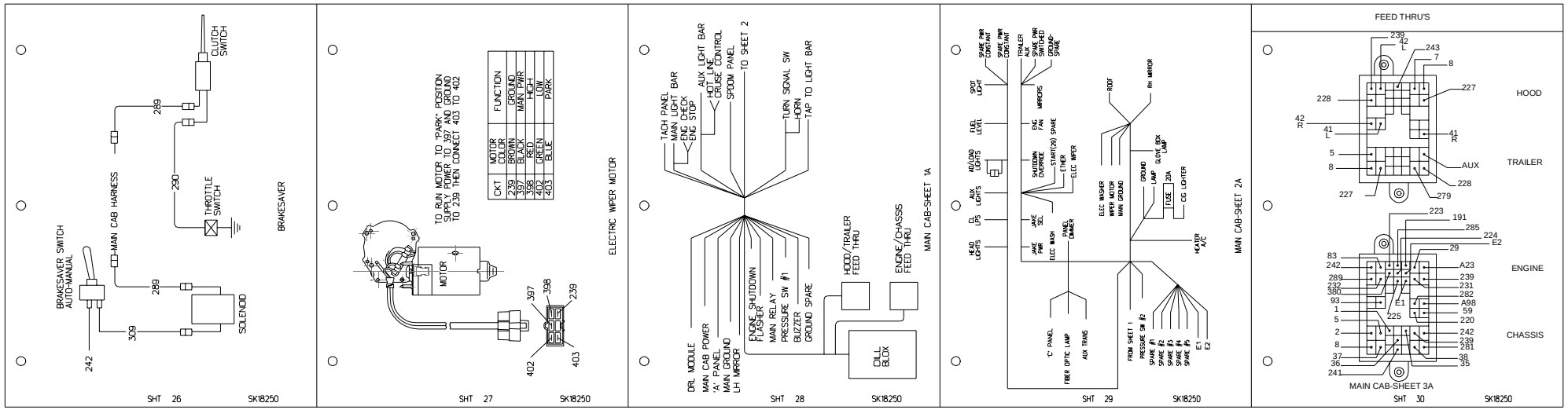

Peterbilt
A DIVISION OF PACCAR

PD803374.FRM

SHT 31 SK18250

CIRCUITS-MAIN CAB HARNESS

LH MIRROR-302,239,5,228
MAIN GROUND-239
'A' PANEL-239,253,242
TACH PANEL-280,239,242,253,282,286,83,29,226
ENG CHECK-419
ENG STOP-438
MAIN LIGHT BAR-98,285,242,343,106,305,228,239,227,192,42,
419,438,220,145,192
HOTLINE-383
CRUISE CONTROL-354
AUX LIGHT BAR-383,302,249,132,354,239
SPDOM PANEL-286,12,23,252,253,14,380,239,242,226
BUZZER-242,343
SPARE GROUND-239
HORN-283
TURN SIGNAL SWITCH-A39,281,A8,8,37,38,227,228
TAP TO LIGHT BAR-42,285,106
PRESSURE SW #1-23,106,231,305,239
MAIN RELAY-298,304,286,239
FLASHER-39,A39
ENGINE SHUTDOWN-A23,29,232,A98,98,23
MAIN CAB POWER-298

ALL ABOVE-REF SHEET 1A-MAIN CAB
MAIN CAB-SHEET 4A

SHT 32 SK18250

CIRCUITS-MAIN CAB HARNESS

PRESSURE SW #2-242,239,305,145,279,3,281,192
SPARE #1-226#1
SPARE #2-226#2
SPARE #3-226#3
SPARE #4-230#4
SPARE #5-230#5
E1-E1
E2-E2
HEATER A/C-239,191,253,45,93
GROUND-239
LAMP-253
CIG LIGHTER-280
GLOVE BOX LAMP-253,239
RH MIRROR-302,227,5,239
ROOF-132,A252,229,254,249,248,19,239,429,329,5,348
ELEC WASHER-239,404
ELEC WIPER-239,398,397,402,403
MAIN GROUND-239
'C' PANEL-35,36,59,242,280,253,239
AUX TRANS-241
FIBER OPTIC LAMP-253,239
PANEL DIMMER-13,239,253

ALL ABOVE-REF SHEET 2A-MAIN CAB
MAIN CAB-SHEET 5A

SHT 33 SK18250

CIRCUITS-MAIN CAB HARNESS

HEADLIGHTS-28,8,298,24
CL LPS-28,8,25,5
AUX LIGHTS-28,8,27,7
AD/LOAD LIGHTS-280,249,254
FUEL LEVEL-1,2,14
SPOT LIGHT-280,132
SPARE SW SWITCHED-226
SPARE SW CONSTANT-230
TRAILER AUX-AUX
SPARE PWR-280
SPARE GROUND-239
MIRRORS-302,303
ENG FAN-242,220
SHUTDOWN OVERRIDE-23,232
START-SPARE-29
ETHER-29,83
ELEC WIPER-239,398,397,402,403,404
ELEC WASH-242,404
JAKE SEL-223,224,225
JAKE PWR-242,289
DAYTIME RUNNING LIGHTS- 29, 41, 42, 239, 242, 298, 328

ALL ABOVE-REF SHEET 2A-MAIN CAB
MAIN CAB-SHEET 6A

SHT 34 SK18250

CIRCUIT FLOW-MAIN CAB

CKT	
AUX	FEED THRU TO SWITCH
E1	FEED THRU TO SPARES
E2	FEED THRU TO SPARES
1	FEED THRU TO FUEL SWITCH
2	FEED THRU TO FUEL SWITCH
3	CIRC BRKR TO PRESS SW #2
4	CIRC BRKR TO LT RELAY, TURN SIGNAL SW, AND RT RELAY
A4	TURN SIGNAL SW TO LT RELAY AND RT RELAY
5	CL LPS TO ROOF, RT MIRROR, LT MIRROR, TRAILER AND CHASSIS FEED THRUS
7	AUX LIGHT SW TO HOOD FEED THRU
8	AUX LIGHT SW TO CL LP SPUHEAD LP SW, PANEL LPS, TRAILER/HOOD AND CHASSIS FEEDS
12	CIRC BRKR TO SPDOM HARNESS
13	PANEL LP FUSE TO PANEL LP CONTROL
14	FUEL LEVEL SW TO SPDOM HARNESS
19	ROOF FUSE TO ROOF HARNESS
23	SPDOM TO OVERRIDE-SHUTDOWN, AND PRESS SW #1
A23	SHUTDOWN TO ENG FEED THRU
24	HEADLIGHT SW TO LT AND RT HEADLIGHT RELAYS
25	CL LPS FUSE TO SWITCH
27	AUX LIGHTS FUSE TO SWITCH
28	CIRC BRKR TO HD LP SW, CL LP SW, AND AUX LP SW
29	TACH HARNESS TO SPARE, ETHER SW, SHUTDOWN, ENG FEED THRU, AND TO DRL MODULE
35	FEED THRU TO 'C' PANEL
36	FEED THRU TO 'C' PANEL
37	TURN SIG SW TO CHASSIS FEED THRU
38	TURN SIG SW TO CHASSIS FEED THRU

MAIN CAB-SHEET 7A

SHT 35 SK18250

CIRCUIT FLOW-MAIN CAB

CKT	
39	FLASHER FUSE TO FLASHER
A39	FLASHER TO TURN SIGNAL SWITCH
41	LEFT LOW BEAM RELAY TO HOOD AND DRL MODULE
41	RIGHT LOW BEAM RELAY TO HOOD AND DRL MODULE
42	LEFT HIGH BEAM RELAY TO HOOD, RIGHT RELAY, LIGHT BAR SPARE TAP AND DRL MODULE
42	RIGHT HIGH BEAM RELAY TO HOOD AND DRL MODULE
45	HEATER FUSE TO HEATER
59	FEED THRU TO "C" PANEL
83	SPDOM PANEL TO TACH PANEL, ETHER SW, & ENGINE FEED THRU
93	HEATER TO ENGINE FEED THRU
98	LIGHT BAR TO ENGINE SHUTDOWN CONNECTION
A98	SHUTDOWN CONNECTION TO ENGINE FEED THRU
106	OIL PRESS SW TO LIGHT BAR AND SPARE TAP
132	SPOT LAMP SWITCH TO ROOF HARNESS AND LIGHT BAR
145	DIFF LOCK PRESS SW TO LIGHT BAR
191	AIR COND TO ENGINE FEED THRU
192	5TH WHL PRESS SW TO LIGHT BAR
220	ENGINE FAN SW TO LIGHT BAR AND ENGINE FEED THRU
223	ENGINE FEED THRU TO JAKE SELECTION SWITCH
224	JAKE SELECTION SW TO ENGINE FEED THRU
225	JAKE SELECTION SW TO ENGINE FEED THRU
226	FUSE TO SPARE SW, ENG FAN, SPDOM HARNESS, & TACH HARNESS
226	FUSE TO SPARE #1
226	FUSE TO SPARE #2
226	FUSE TO SPARE #3
227	TURN SIGNAL SW TO LIGHT BAR, RIGHT MIRROR, HOOD, AND TRAILER

MAIN CAB-SHEET 8A

SHT 36 SK18250

INDEX

	PAGE
GAUGE CIRCUITS	1
SWITCH CIRCUITS	2
JUMPERS	6
COLOR CODE	7
JAKE BRAKE	8
WARNING LIGHT BARS	9
SWITCH LAYOUT-TOGGLE	10
SWITCH LAYOUT-PRESSURE	11
SPDOM/TACH	12
CONTROL PANEL	13
ROOF	14
CHASSIS	15
DILL BLOX PANEL	16
TRINARY	17
12V CHARGING	18
SERIES PARALLEL	19
12V ENGINE	20
24V ENGINE	21
RADIOS	22
HEADLAMP CONTROL	23
RADIO SPEAKERS	24
HOOD	25
BRAKESAVER	26
ELECTRIC WIPER MOTOR	27
MAIN CAB	28

SHT 37 SK18250

CIRCUITS-MAIN CAB HARNESS

CKT	
228	TURN SIGNAL SW TO LIGHT BAR, LEFT MIRROR, HOOD, AND TRAILER
229	AUX DEF FAN FUSE TO ROOF HARNESS
230	FUSE TO SPARE SW, FUSE TO #4, FUSE TO #5
231	OIL PRESS SW TO ENGINE FEED THRU
232	ENGINE FEED THRU TO SHUTDOWN MODULE AND OVERRIDE SWITCH
239	GROUND-HEATER EXTRUSION RH SIDE TO GLOVE BOX LIGHT, TO ELEC WASHER, TO ROOF HARNESS, TO RH MIRROR, TO WIPER MOTOR, TO HEATER, TO LIGHTER, TO 'C' PANEL, TO FIBER OPTIC LIGHT, TO DIMMER, TO SPARE SW, TO WIPER CONTROL, TO WASH/WIPE, TO STRUCTURE LH SIDE, TO, TO TACH PANEL, TO UPPER LIGHT BAR, TO LOWER LIGHT BAR, TO SPDOM PANEL, TO FLASHER, TO MAIN RELAY, TO PRESS SW #1, TO LH MIRROR, TO SHUTDOWN RELAY, TO HOOD FEED THRU, TO ENGINE FEED THRU, TO CHASSIS FEED THRU, TO LEFT HD LP RELAY, TO RIGHT HD LP RELAY, DILL BOX LAMP TO DRL MODULE
241	CHASSIS FEED THRU TO 'C' PANEL
242	SWITCHED POWER FUSE TO ENGINE FEED THRU, TO CHASSIS FEED THRU TO BUZZER, TO 'A' PANEL, TO TACH PANEL, TO LIGHT BAR, TO SPDOM PANEL, TO 'C' PANEL, TO ENGINE BRAKE, TO ENGINE FAN SW, TO ELEC WASHER, PRESS SW #2 TO DRL MODULE
243	HORN RELAY TO HOOD FEED THRU
248	SLEEPER POWER FUSE TO ROOF HARNESS
249	LOAD LP SW TO SPARE, TO ROOF HARNESS, AND LIGHT BAR
252	RADIO POWER SPDOM PANEL TO FUSE IN DILL BLOX
A252	FUSE TO ROOF HARNESS
253	PANEL LP CONTROL TO FIBER OPTIC LP, TO 'C' PANEL, TO GLOVE BOX LP, TO LIGHTER, TO HEATER CONTROL, TO SPDOM, TACH AND 'A' PANELS

MAIN CAB-SHEET 9A

SHT 38 SK18250

CIRCUITS-MAIN CAB HARNESS

CKT	
254	AD LP SW TO ROOF HARNESS
279	TRAILER BRK SW TO TRAILER FEED THRU
280	UNSWITCHED POWER FUSE TO HORN RELAY, TO TACH PANEL, TO 'C' PANEL, TO AD/LOAD LP SW, TO SPOT LP SW, TO SPARE SW, TO LIGHTER FUSE AND LIGHTER
281	BRAKE LP SW TO CHASSIS FEED THRU AND TURN SIGNAL SWITCH
282	ENGINE FEED THRU TO TACH PANEL
283	HORN BUTTON TO RELAY
285	ENGINE FEED THRU TO LIGHT BAR AND SPARE TAP
286	KEY PWR-SPDOM TO TACH AND TO MAIN RELAY
289	JAKE SW TO ENGINE FEED THRU
298	FRAME CIRCUIT BREAKER TO MAIN RELAY, TO HD LP SW, TO DILL BLOX,TO IG SW CIRCUIT BREAKER, TAIL LP CIRCUIT BREAKER, AND DRL MODULE
302	MIRROR SW TO LH MIRROR, RH MIRROR, AND LIGHT BAR
303	MIRROR HEAT FUSE TO SW
304	RELAY TO STOP LP CIRCUIT BREAKER AND DILL BLOX
305	PRESS SW #1 TO PRESS SW #2, AND LIGHT BAR
328	PARKING BRAKE SW TO DRL MODULE
329	ROOF TO DILL BLOX LP
343	LIGHT BAR TO BUZZER
348	CB FUSE TO ROOF HARNESS
354	CRUISE CONTROL SPARE TAP TO LIGHT BAR
380	ENGINE FEED THRU TO SPDOM PANEL
383	HOTLINE SPARE TAP TO LIGHT BAR
397	ELEC WIPER FUSE TO CONTROL AND MOTOR
398	CONTROL TO MOTOR-HIGH
402	CONTROL TO MOTOR-LOW

MAIN CAB-SHEET 10A

SHT 39 SK18250

CIRCUITS-MAIN CAB HARNESS

CKT	
403	CONTROL TO MOTOR-PARK
404	ELEC WASHER TO WIPER CONTROL AND WASHER
419	ENGINE CHECK TAP TO LIGHT BAR
429	SLEEPER POWER FUSE TO ROOF HARNESS
438	ENGINE STOP TAP TO LIGHT BAR

MAIN CAB-SHEET 11A